Practibox S
1 341 00

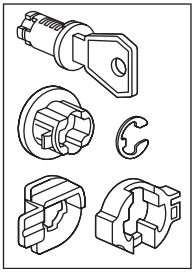

1

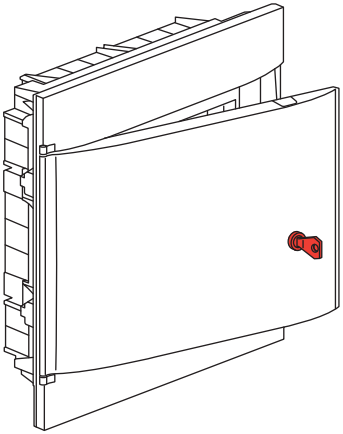

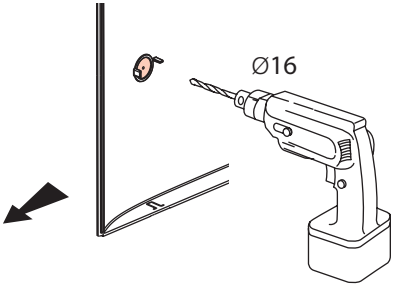

2

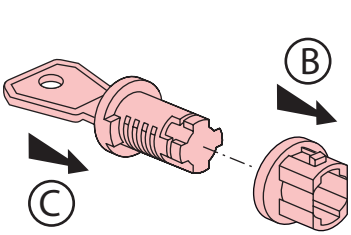

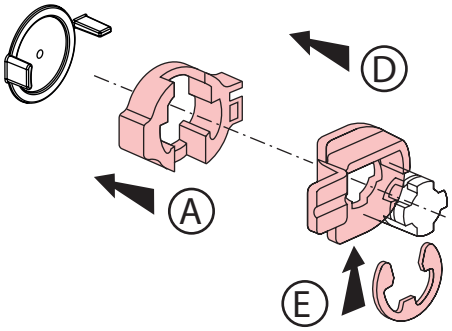

LE10833AA_01