legrand®

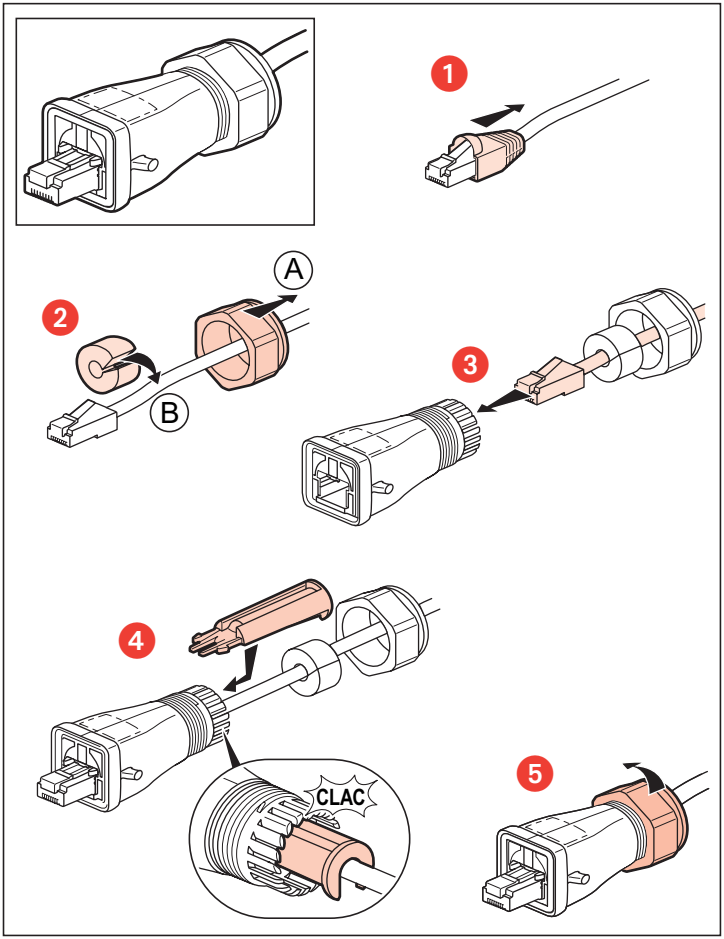

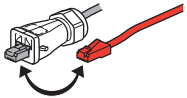

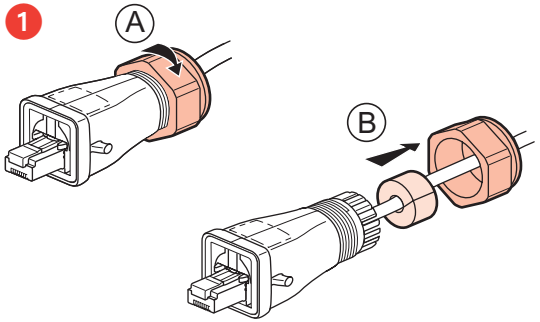

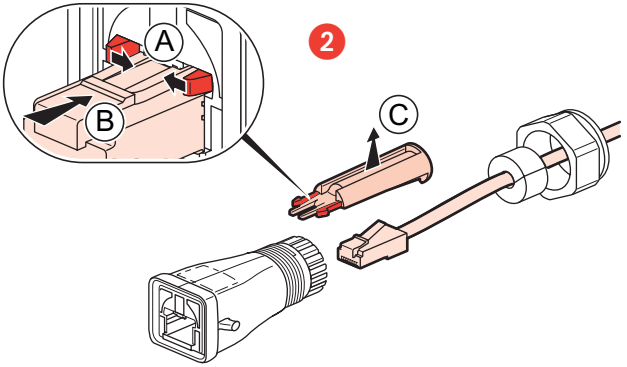

N041667/00