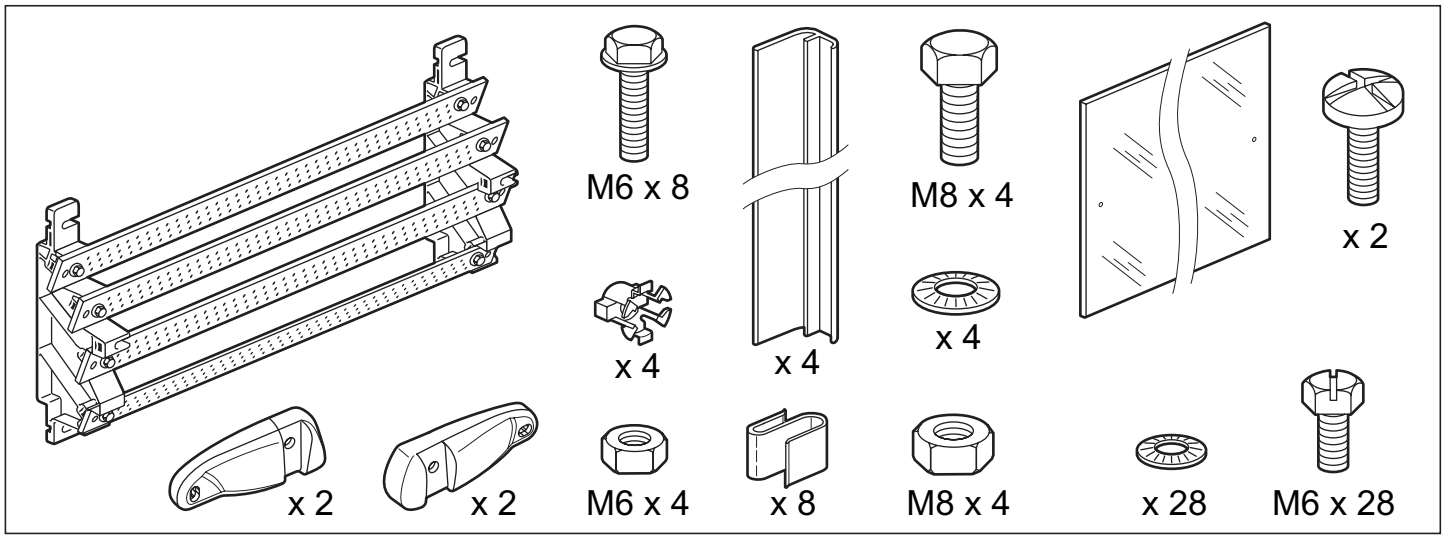
M6 x 8
M8 x 4
x 2
x 4
x 4
x 4
x 2
x 2
M6 x 4
x 8
M8 x 4
x 28
M6 x 28

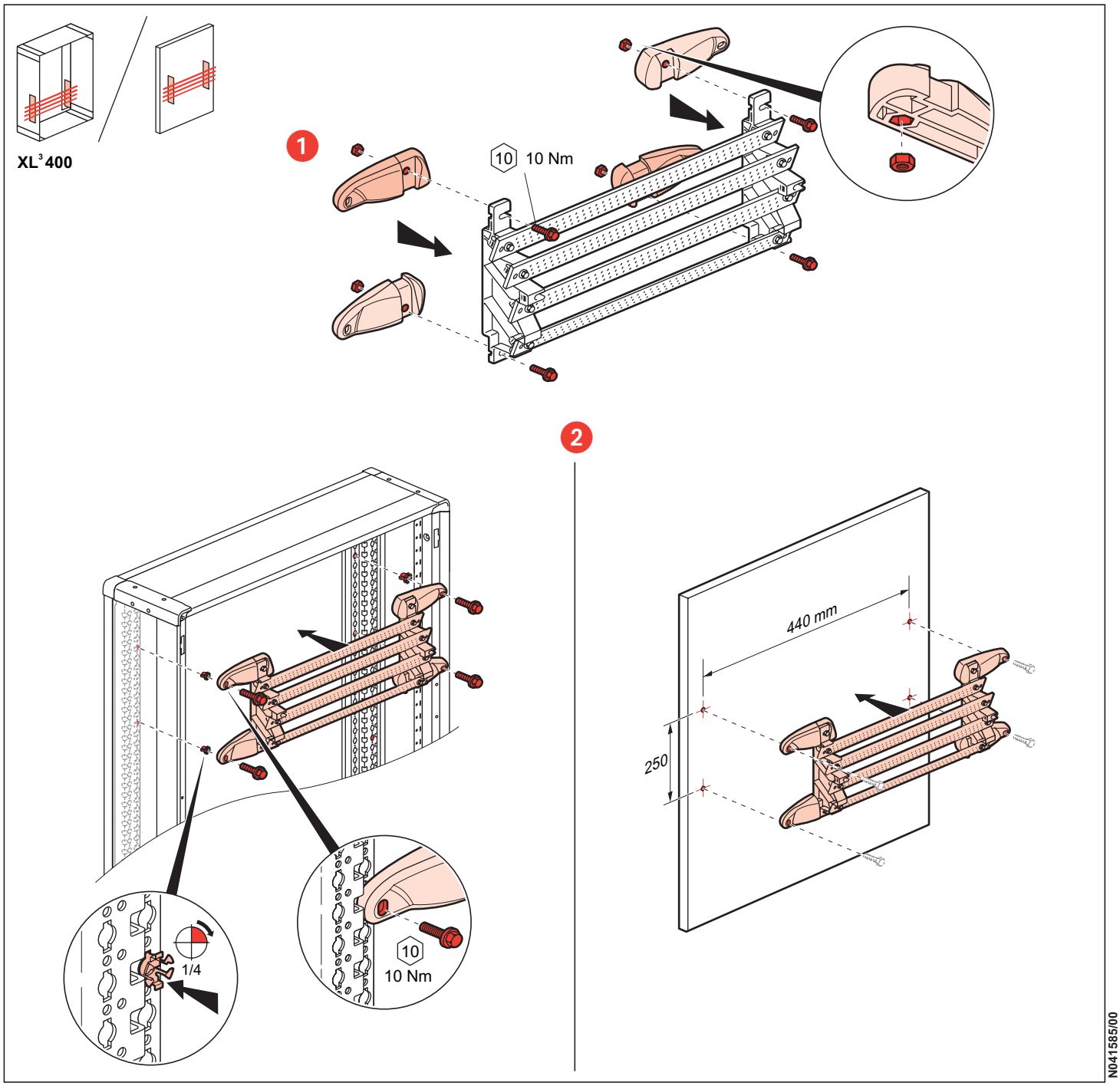
XL³ 400
1
10 10 Nm
2
440 mm
250
1/4
10
10 Nm

N041585/00

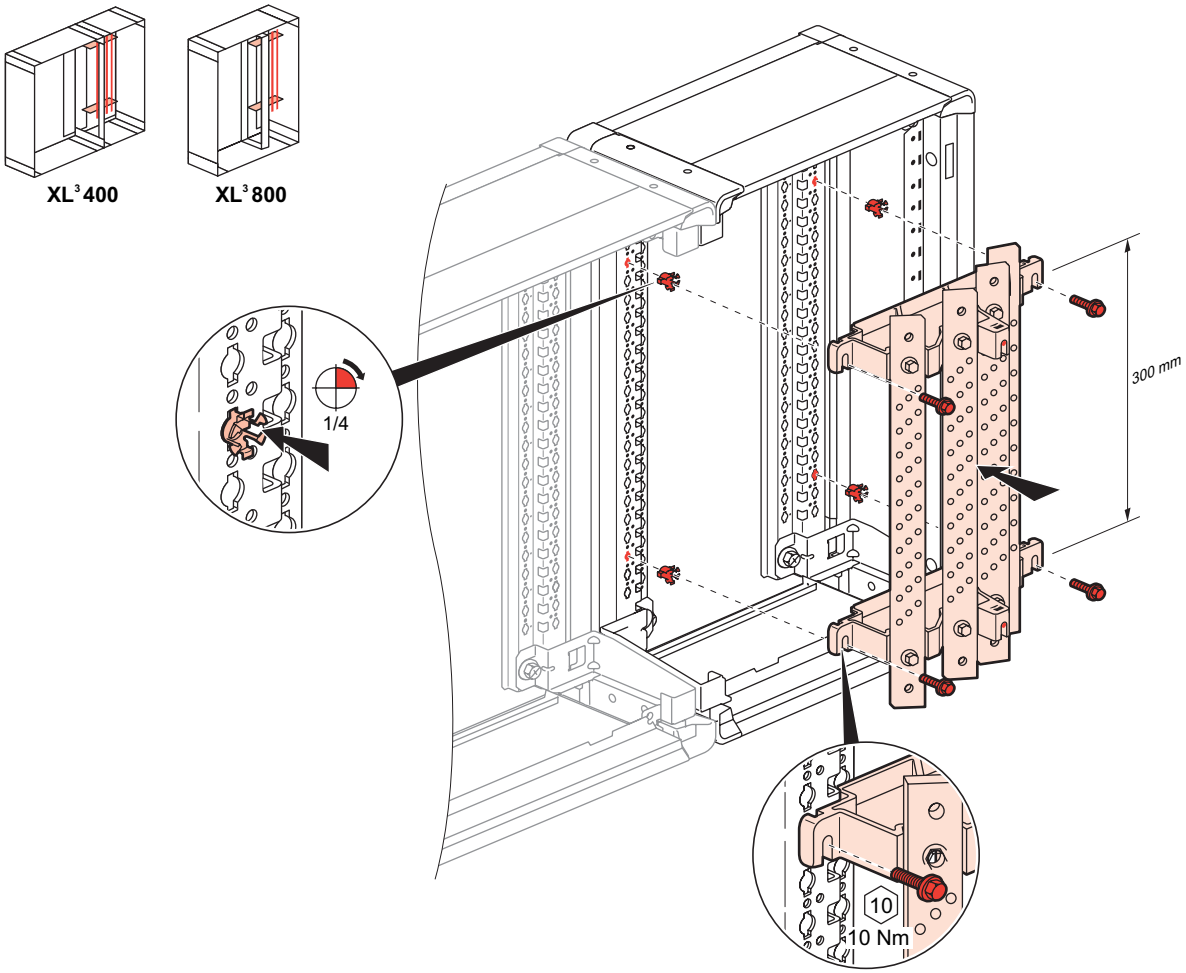
XL³400
XL³800
1/4
300 mm
10
10 Nm

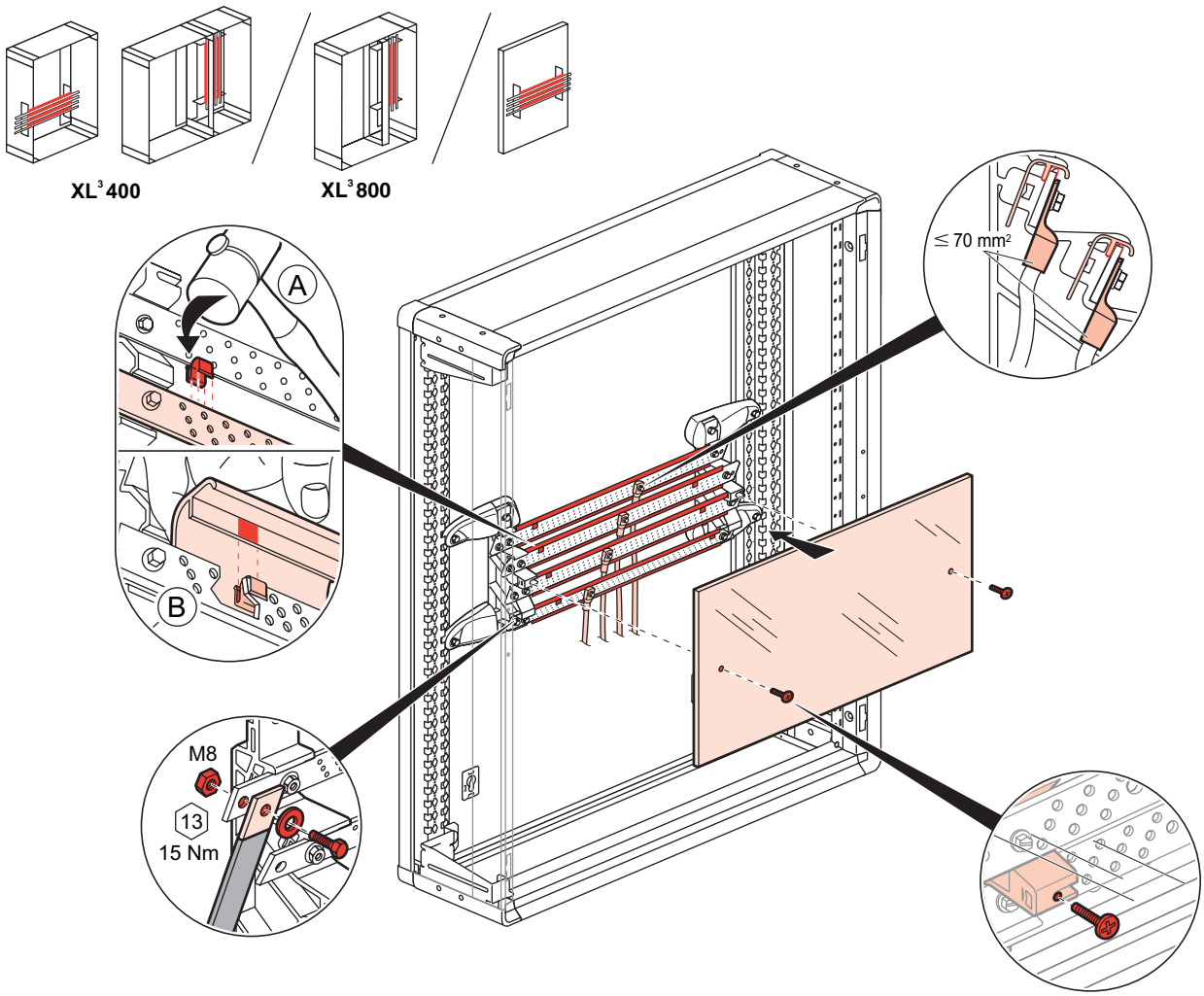
XL³400
XL³800
A
B
≤ 70 mm²
M8
13
15 Nm

N041585/00